CONTACT
[東京]TEL：03(3257)1911・FAX：03(3257)1915
[大阪]TEL：06(6940)1951・FAX：06(6940)1952
[東北]TEL：0248(28)2293・FAX：03(3257)1915
E-mail：chuo-sales@chuo.co.jp
URL：https://www.chuo.co.jp

平凸レンズ(PCX)

RoHS2 規制10物質不含有品

▲平凸レンズ(PCX)

平凸レンズ(Plano Convex; PCX)は正の焦点距離をもち、像の拡大や集光用途に主に利用されます。無限共役比の結像用途や、単位共役比でも5：1以上の拡大、あるいは縮小の結像用途において、両凸レンズよりも良好な結像結果が得られます。この時、レンズの凸面を共役点の長い方に向けると、通常は良好な結果が得られます。当社ではコートなしのレンズ(レンズ一面当たりの反射率約4%)に加え、2種類の標準反射防止膜(シングル or マルチコート)のついたレンズをご用意しました。標準コートの一面当たりの反射率特性は、グラフをご覧ください。

製品の外観図

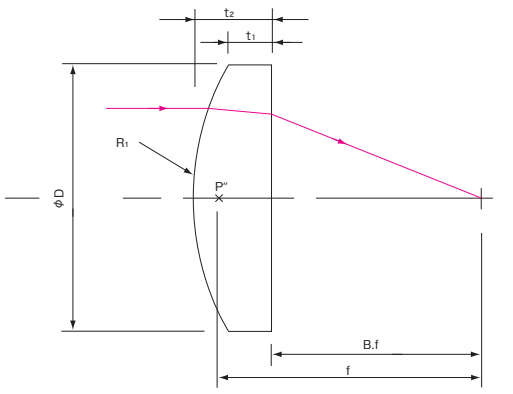

レンズ外形(mm)	5.0	6.0～12.0	15.0～40.0	50.0～75.0
表面品質(キズ-ブツ)	40-20	40-20	60-40	60-40
有効径(mm)	[外形]-0.5	[外形]-1.0	[外形]-1.5	[外形]-1.5
外形公差(mm)	+0.0 -0.05	+0.0 -0.10	+0.0 -0.10	+0.0 -0.10
中心厚公差(mm)	±0.1	±0.1	±0.1	±0.1
偏芯公差	3′～5′	3′～5′	3′～5′	3′～5′
面取り	保護用に必要に応じて処理			

設計波長	587.6nm
焦点距離公差	±1%
コバ厚	参考値

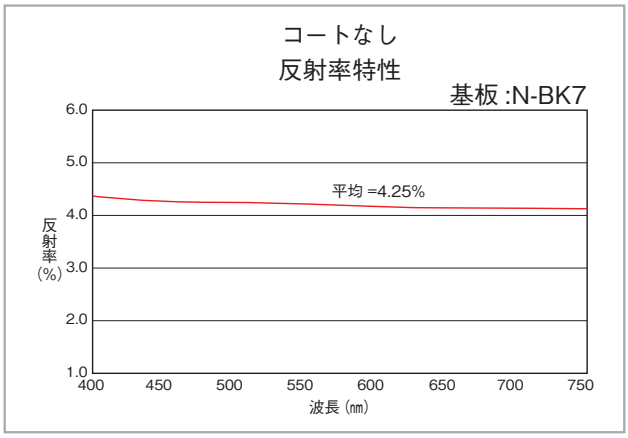

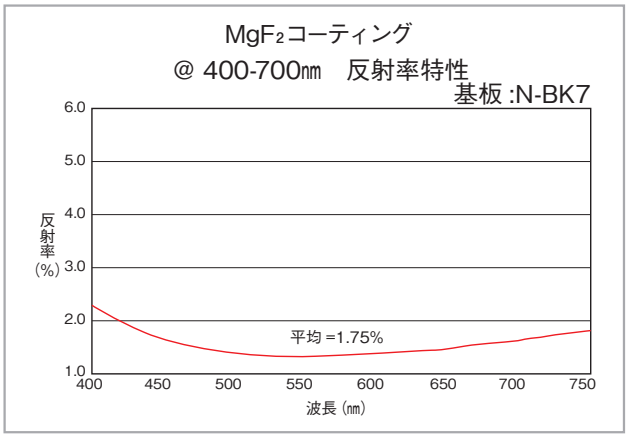

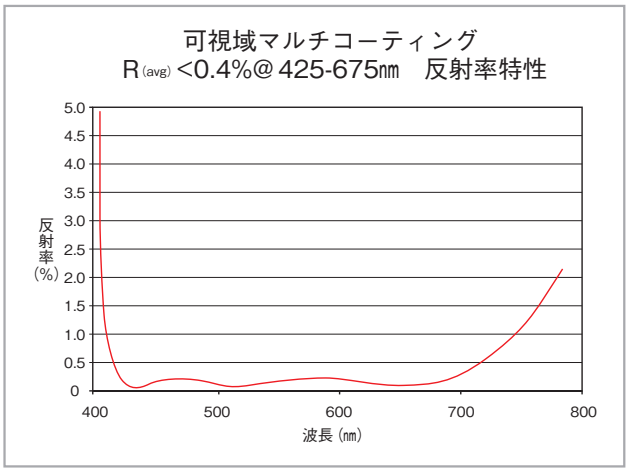

単レンズ オプティカルエレメント

■平凸レンズ(PCX)

コートなし	MgF_2コーティング	可視域マルチコーティング	D(mm)	f(mm)	B.f(mm)	t1(mm)	t2(mm)	R(mm)	材質
製品番号	製品番号	製品番号							
PCX-5-5	PCX-5-5M	PCX-5-5V	5.0	5.0	3.96	1.00	1.87	4.02	N-LaSF44
PCX-5-10	PCX-5-10M	PCX-5-10V	5.0	10.0	8.91	1.00	1.64	5.17	N-BK7
PCX-5-12	PCX-5-12M	PCX-5-12V	5.0	12.0	10.83	1.25	1.77	6.22	N-BK7
PCX-5-15	PCX-5-15M	PCX-5-15V	5.0	15.0	13.94	1.19	1.60	7.75	N-BK7
PCX-5-20	PCX-5-20M	PCX-5-20V	5.0	20.0	19.02	1.19	1.50	10.34	N-BK7
PCX-6-6	PCX-6-6M	PCX-6-6V	6.0	6.0	4.60	1.42	2.50	4.71	N-SF11
PCX-6-7.5	PCX-6-7.5M	PCX-6-7.5V	6.0	7.5	6.10	1.68	2.50	5.89	N-SF11
PCX-6-9	PCX-6-9M	PCX-6-9V	6.0	9.0	7.95	0.95	1.75	6.05	N-SF5
PCX-6-12	PCX-6-12M	PCX-6-12V	6.0	12.0	10.94	0.83	1.60	6.20	N-BK7
PCX-6-15	PCX-6-15M	PCX-6-15V	6.0	15.0	13.68	1.40	2.00	7.75	N-BK7
PCX-6-18	PCX-6-18M	PCX-6-18V	6.0	18.0	17.07	0.90	1.42	9.30	N-BK7
PCX-6-21	PCX-6-21M	PCX-6-21V	6.0	21.0	20.06	1.00	1.42	10.85	N-BK7
PCX-6-24	PCX-6-24M	PCX-6-24V	6.0	24.0	23.01	1.13	1.50	12.40	N-BK7
PCX-6-30	PCX-6-30M	PCX-6-30V	6.0	30.0	29.14	1.01	1.30	15.50	N-BK7
PCX-6-36	PCX-6-36M	PCX-6-36V	6.0	36.0	34.95	1.36	1.60	18.61	N-BK7
PCX-6-48	PCX-6-48M	PCX-6-48V	6.0	48.0	46.95	1.42	1.60	24.81	N-BK7
PCX-6-72	PCX-6-72M	PCX-6-72V	6.0	72.0	70.97	1.48	1.60	37.22	N-BK7
PCX-9-9	PCX-9-9M	PCX-9-9V	9.0	9.0	7.32	1.38	3.00	7.06	N-SF11
PCX-9-12	PCX-9-12M	PCX-9-12V	9.0	12.0	10.60	1.36	2.50	9.42	N-SF11
PCX-9-13.5	PCX-9-13.5M	PCX-9-13.5V	9.0	13.5	11.94	1.40	2.60	9.09	N-SF5
PCX-9-15	PCX-9-15M	PCX-9-15V	9.0	15.0	13.02	1.56	3.00	7.75	N-BK7
PCX-9-18	PCX-9-18M	PCX-9-18V	9.0	18.0	16.41	1.26	2.41	9.32	N-BK7
PCX-9-22	PCX-9-22M	PCX-9-22V	9.0	22.0	20.73	1.00	1.93	11.37	N-BK7
PCX-9-27	PCX-9-27M	PCX-9-27V	9.0	27.0	25.35	1.75	2.50	13.95	N-BK7
PCX-9-36	PCX-9-36M	PCX-9-36V	9.0	36.0	34.48	1.75	2.30	18.61	N-BK7
PCX-9-45	PCX-9-45M	PCX-9-45V	9.0	45.0	43.98	1.10	1.54	23.26	N-BK7
PCX-10-10	PCX-10-10M	PCX-10-10V	10.0	10.0	8.18	1.45	3.25	7.85	N-SF11
PCX-10-15	PCX-10-15M	PCX-10-15V	10.0	15.0	13.32	1.89	3.00	11.77	N-SF11
PCX-10-20	PCX-10-20M	PCX-10-20V	10.0	20.0	18.03	1.71	3.00	10.34	N-BK7
PCX-10-25	PCX-10-25M	PCX-10-25V	10.0	25.0	23.02	1.99	3.00	12.92	N-BK7
PCX-10-30	PCX-10-30M	PCX-10-30V	10.0	30.0	28.01	2.17	3.00	15.5	N-BK7
PCX-10-40	PCX-10-40M	PCX-10-40V	10.0	40.0	38.02	2.39	3.00	20.67	N-BK7
PCX-10-50	PCX-10-50M	PCX-10-50V	10.0	50.0	48.02	2.51	3.00	25.84	N-BK7
PCX-10-75	PCX-10-75M	PCX-10-75V	10.0	75.0	73.02	2.68	3.00	38.76	N-BK7
PCX-10-100	PCX-10-100M	PCX-10-100V	10.0	100.0	98.02	2.76	3.00	51.68	N-BK7
PCX-12-12	PCX-12-12M	PCX-12-12V	12.0	12.0	9.76	1.84	4.00	9.42	N-SF11
PCX-12-15	PCX-12-15M	PCX-12-15V	12.0	15.0	12.03	1.66	4.50	7.75	N-BK7
PCX-12-18	PCX-12-18M	PCX-12-18V	12.0	18.0	16.21	1.41	3.00	12.12	N-SF5
PCX-12-20	PCX-12-20M	PCX-12-20V	12.0	20.0	17.69	1.58	3.50	10.34	N-BK7
PCX-12-24	PCX-12-24M	PCX-12-24V	12.0	24.0	22.15	1.25	2.80	12.42	N-BK7
PCX-12-30	PCX-12-30M	PCX-12-30V	12.0	30.0	28.02	1.79	3.00	15.50	N-BK7
PCX-12-36	PCX-12-36M	PCX-12-36V	12.0	36.0	32.02	2.01	3.00	18.61	N-BK7
PCX-12-42	PCX-12-42M	PCX-12-42V	12.0	42.0	40.22	1.85	2.70	21.71	N-BK7
PCX-12-48	PCX-12-48M	PCX-12-48V	12.0	48.0	46.36	1.76	2.50	24.82	N-BK7
PCX-12-54	PCX-12-54M	PCX-12-54V	12.0	54.0	52.02	2.35	3.00	27.91	N-BK7
PCX-12-60	PCX-12-60M	PCX-12-60V	12.0	60.0	58.37	1.91	2.50	31.02	N-BK7
PCX-12-72	PCX-12-72M	PCX-12-72V	12.0	72.0	70.42	1.91	2.40	37.21	N-BK7
PCX-12-84	PCX-12-84M	PCX-12-84V	12.0	84.0	82.39	2.08	2.50	43.43	N-BK7
PCX-12-100	PCX-12-100M	PCX-12-100V	12.0	100.0	98.35	2.15	2.50	51.68	N-BK7
PCX-12.7-12.7	PCX-12.7-12.7M	PCX-12.7-12.7V	12.7	12.7	10.46	1.72	4.00	9.97	N-SF11
PCX-12.7-15	PCX-12.7-15M	PCX-12.7-15V	12.7	15.0	11.53	1.94	5.25	7.75	N-BK7
PCX-12.7-19.1	PCX-12.7-19.1M	PCX-12.7-19.1V	12.7	19.1	16.46	1.69	4.00	9.87	N-BK7
PCX-12.7-25.4	PCX-12.7-25.4M	PCX-12.7-25.4V	12.7	25.4	23.43	1.36	3.00	13.13	N-BK7
PCX-12.7-31.8	PCX-12.7-31.8M	PCX-12.7-31.8V	12.7	31.8	29.81	1.72	3.00	16.43	N-BK7
PCX-12.7-38.1	PCX-12.7-38.1M	PCX-12.7-38.1V	12.7	38.1	36.12	1.95	3.00	19.69	N-BK7
PCX-12.7-44.5	PCX-12.7-44.5M	PCX-12.7-44.5V	12.7	44.5	42.69	1.86	2.75	23.00	N-BK7
PCX-12.7-50.8	PCX-12.7-50.8M	PCX-12.7-50.8V	12.7	50.8	49.15	1.72	2.50	26.25	N-BK7
PCX-15-15	PCX-15-15M	PCX-15-15V	15.0	15.0	11.71	2.16	5.50	10.09	N-SF5
PCX-15-18	PCX-15-18M	PCX-15-18V	15.0	18.0	15.61	1.40	4.00	12.11	N-SF5
PCX-15-20	PCX-15-20M	PCX-15-20V	15.0	20.0	17.74	1.52	3.80	13.46	N-SF5
PCX-15-22.5	PCX-15-22.5M	PCX-15-22.5V	15.0	22.5	20.50	1.36	3.35	15.12	N-SF5
PCX-15-30	PCX-15-30M	PCX-15-30V	15.0	30.0	27.90	1.23	3.18	15.52	N-BK7
PCX-15-40	PCX-15-40M	PCX-15-40V	15.0	40.0	38.02	1.59	3.00	20.67	N-BK7
PCX-15-45	PCX-15-45M	PCX-15-45V	15.0	45.0	43.35	1.26	2.50	23.26	N-BK7
PCX-15-60	PCX-15-60M	PCX-15-60V	15.0	60.0	58.65	1.13	2.05	31.11	N-BK7
PCX-15-75	PCX-15-75M	PCX-15-75V	15.0	75.0	73.79	1.10	1.83	38.76	N-BK7
PCX-15-100	PCX-15-100M	PCX-15-100V	15.0	100.0	98.02	2.45	3.00	51.68	N-BK7
PCX-18-18	PCX-18-18M	PCX-18-18V	18.0	18.0	15.20	1.76	5.00	14.13	N-SF11
PCX-18-22.5	PCX-18-22.5M	PCX-18-22.5V	18.0	22.5	20.26	1.53	4.00	17.66	N-SF11
PCX-18-27	PCX-18-27M	PCX-18-27V	18.0	27.0	24.73	1.42	3.80	18.16	N-SF5
PCX-18-36	PCX-18-36M	PCX-18-36V	18.0	36.0	33.65	1.26	3.57	18.62	N-BK7
PCX-18-54	PCX-18-54M	PCX-18-54V	18.0	54.0	52.02	1.51	3.00	27.91	N-BK7
PCX-18-72	PCX-18-72M	PCX-18-72V	18.0	72.0	70.05	1.90	3.00	37.22	N-BK7
PCX-20-20	PCX-20-20M	PCX-20-20V	20.0	20.0	17.42	1.00	4.60	15.70	N-SF11
PCX-20-25	PCX-20-25M	PCX-20-25V	20.0	25.0	22.76	1.26	4.00	19.62	N-SF11

CONTACT
[東京]TEL：03(3257)1911・FAX：03(3257)1915
[大阪]TEL：06(6940)1951・FAX：06(6940)1952
[東北]TEL：0248(28)2293・FAX：03(3257)1915
E-mail：chuo-sales@chuo.co.jp
URL：https://www.chuo.co.jp

オプティカルエレメント ▶単レンズ

■平凸レンズ(PCX)

コートなし	MgF_2コーティング	可視域マルチコーティング	D(mm)	f(mm)	B.f(mm)	t1(mm)	t2(mm)	R(mm)	材質
製品番号	製品番号	製品番号							
PCX-20-30	PCX-20-30M	PCX-20-30V	20.0	30.0	27.30	1.84	4.50	20.10	N-BaF10
PCX-20-35	PCX-20-35M	PCX-20-35V	20.0	35.0	32.04	1.48	4.50	18.09	N-BK7
PCX-20-40	PCX-20-40M	PCX-20-40V	20.0	40.0	36.77	2.32	4.90	20.67	N-BK7
PCX-20-50	PCX-20-50M	PCX-20-50V	20.0	50.0	47.87	1.22	3.23	25.84	N-BK7
PCX-20-60	PCX-20-60M	PCX-20-60V	20.0	60.0	57.03	2.84	4.50	31.01	N-BK7
PCX-20-70	PCX-20-70M	PCX-20-70V	20.0	70.0	68.03	1.59	3.00	36.18	N-BK7
PCX-20-80	PCX-20-80M	PCX-20-80V	20.0	80.0	78.45	1.13	2.35	41.48	N-BK7
PCX-20-100	PCX-20-100M	PCX-20-100V	20.0	100.0	97.13	3.32	4.30	51.68	N-BK7
PCX-20-150	PCX-20-150M	PCX-20-150V	20.0	150.0	148.02	2.35	3.00	77.52	N-BK7
PCX-25-25	PCX-25-25M	PCX-25-25V	25.0	25.0	20.22	2.43	8.00	16.82	N-SF5
PCX-25-30	PCX-25-30M	PCX-25-30V	25.0	30.0	24.69	1.72	8.06	15.50	N-BK7
PCX-25-35	PCX-25-35M	PCX-25-35V	25.0	35.0	30.42	2.00	7.01	18.11	N-BK7
PCX-25-40	PCX-25-40M	PCX-25-40V	25.0	40.0	36.31	1.39	5.60	20.67	N-BK7
PCX-25-50	PCX-25-50M	PCX-25-50V	25.0	50.0	46.75	1.68	4.90	25.84	N-BK7
PCX-25-60	PCX-25-60M	PCX-25-60V	25.0	60.0	56.90	2.07	4.70	31.01	N-BK7
PCX-25-75	PCX-25-75M	PCX-25-75V	25.0	75.0	72.00	2.43	4.50	38.76	N-BK7
PCX-25-85	PCX-25-85M	PCX-25-85V	25.0	85.0	82.17	2.48	4.30	43.93	N-BK7
PCX-25-100	PCX-25-100M	PCX-25-100V	25.0	100.0	97.13	2.77	4.30	51.68	N-BK7
PCX-25-125	PCX-25-125M	PCX-25-125V	25.0	125.0	122.70	2.28	3.50	64.62	N-BK7
PCX-25-150	PCX-25-150M	PCX-25-150V	25.0	150.0	147.81	2.49	3.50	77.55	N-BK7
PCX-25-175	PCX-25-175M	PCX-25-175V	25.0	175.0	172.85	2.63	3.50	90.47	N-BK7
PCX-25-200	PCX-25-200M	PCX-25-200V	25.0	200.0	197.89	2.44	3.20	103.36	N-BK7
PCX-25-400	PCX-25-400M	PCX-25-400V	25.0	400.0	398.73	2.83	3.20	209.20	N-K5
PCX-25-500	PCX-25-500M	PCX-25-500V	25.0	500.0	497.89	2.90	3.20	258.40	N-BK7
PCX-25-750	PCX-25-750M	PCX-25-750V	25.0	750.0	747.89	3.00	3.20	387.60	N-BK7
PCX-25.4-25.4	PCX-25.4-25.4M	PCX-25.4-25.4V	25.4	25.4	21.48	2.43	7.00	19.93	N-SF11
PCX-25.4-38.1	PCX-25.4-38.1M	PCX-25.4-38.1V	25.4	38.1	33.48	2.36	7.00	19.69	N-BK7
PCX-25.4-50.8	PCX-25.4-50.8M	PCX-25.4-50.8V	25.4	50.8	47.50	1.72	5.00	26.25	N-BK7
PCX-25.4-63.5	PCX-25.4-63.5M	PCX-25.4-63.5V	25.4	63.5	60.37	2.19	4.75	32.82	N-BK7
PCX-25.4-76.2	PCX-25.4-76.2M	PCX-25.4-76.2V	25.4	76.2	73.56	1.90	4.00	39.38	N-BK7
PCX-25.4-88.9	PCX-25.4-88.9M	PCX-25.4-88.9V	25.4	88.9	86.26	2.21	4.00	45.94	N-BK7
PCX-25.4-101.6	PCX-25.4-101.6M	PCX-25.4-101.6V	25.4	101.6	98.97	2.44	4.00	52.51	N-BK7
PCX-30-30	PCX-30-30M	PCX-30-30V	30.0	30.0	26.13	1.50	6.90	23.54	N-SF11
PCX-30-50	PCX-30-50M	PCX-30-50V	30.0	50.0	46.17	2.82	6.35	33.63	N-SF5
PCX-30-60	PCX-30-60M	PCX-30-60V	30.0	60.0	56.03	2.13	6.00	31.01	N-BK7
PCX-30-75	PCX-30-75M	PCX-30-75V	30.0	75.0	70.95	3.08	6.10	38.76	N-BK7
PCX-30-100	PCX-30-100M	PCX-30-100V	30.0	100.0	96.01	3.78	6.00	51.68	N-BK7
PCX-30-120	PCX-30-120M	PCX-30-120V	30.0	120.0	116.04	4.16	6.00	62.02	N-BK7
PCX-40-60	PCX-40-60M	PCX-40-60V	40.0	60.0	53.90	2.00	9.31	31.03	N-BK7
PCX-40-80	PCX-40-80M	PCX-40-80V	40.0	80.0	74.73	2.84	8.00	41.34	N-BK7
PCX-40-100	PCX-40-100M	PCX-40-100V	40.0	100.0	95.39	2.97	7.00	51.68	N-BK7
PCX-40-200	PCX-40-200M	PCX-40-200V	40.0	200.0	196.70	3.05	5.00	103.36	N-BK7
PCX-40-300	PCX-40-300M	PCX-40-300V	40.0	300.0	296.70	3.70	5.00	155.04	N-BK7
PCX-40-400	PCX-40-400M	PCX-40-400V	40.0	400.0	396.70	4.03	5.00	206.72	N-BK7
PCX-50-50	PCX-50-50M	PCX-50-50V	50.0	50.0	43.28	3.00	12.00	39.24	N-SF11
PCX-50-75	PCX-50-75M	PCX-50-75V	50.0	75.0	68.39	1.86	11.00	38.76	N-BK7
PCX-50-100	PCX-50-100M	PCX-50-100V	50.0	100.0	93.41	3.55	10.00	51.68	N-BK7
PCX-50-125	PCX-50-125M	PCX-50-125V	50.0	125.0	118.39	4.97	10.00	64.60	N-BK7
PCX-50-150	PCX-50-150M	PCX-50-150V	50.0	150.0	144.07	4.86	9.00	77.52	N-BK7
PCX-50-175	PCX-50-175M	PCX-50-175V	50.0	175.0	169.05	5.48	9.00	90.44	N-BK7
PCX-50-200	PCX-50-200M	PCX-50-200V	50.0	200.0	196.66	2.00	5.07	103.36	N-BK7
PCX-50-250	PCX-50-250M	PCX-50-250V	50.0	250.0	246.74	2.50	4.94	129.21	N-BK7
PCX-50-500	PCX-50-500M	PCX-50-500V	50.0	500.0	496.70	3.79	5.00	258.40	N-BK7
PCX-75-75	PCX-75-75M	PCX-75-75V	75.0	75.0	53.49	3.66	32.68	38.76	N-BK7
PCX-75-150	PCX-75-150M	PCX-75-150V	75.0	150.0	142.45	1.78	11.45	77.52	N-BK7
PCX-75-200	PCX-75-200M	PCX-75-200V	75.0	200.0	194.24	1.70	8.74	103.36	N-BK7
PCX-75-250	PCX-75-250M	PCX-75-250V	75.0	250.0	244.73	2.44	8.00	129.20	N-BK7
PCX-75-500	PCX-75-500M	PCX-75-500V	75.0	500.0	494.73	5.26	8.00	258.40	N-BK7