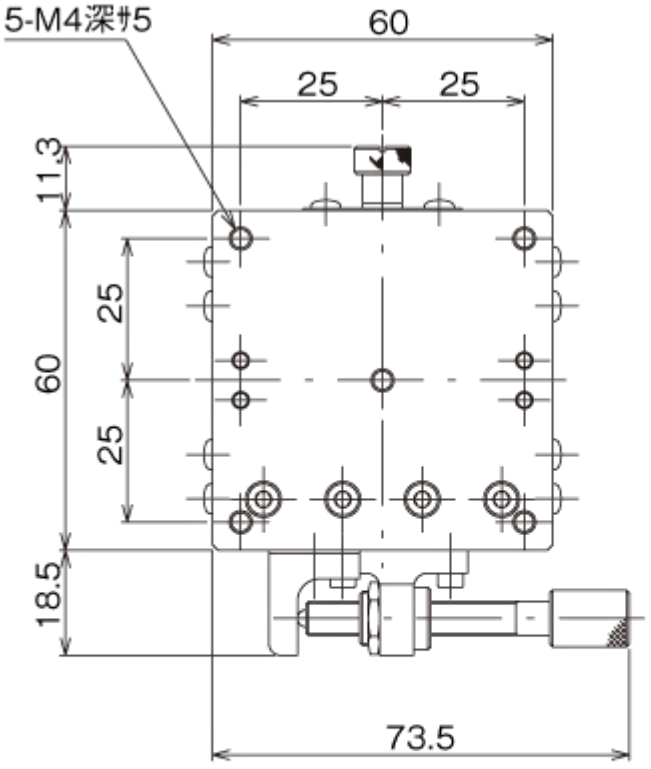
5-M4深ｻ5
60
25
25
11.3
25
60
25
18.5
73.5

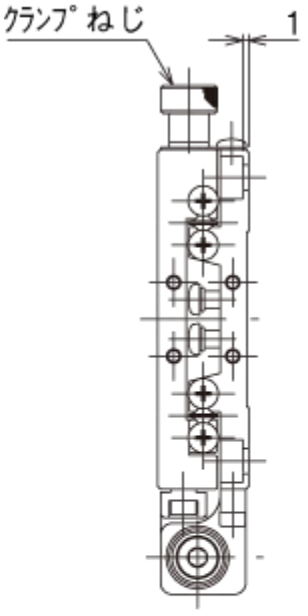
ｸﾗﾝﾌﾟねじ
1

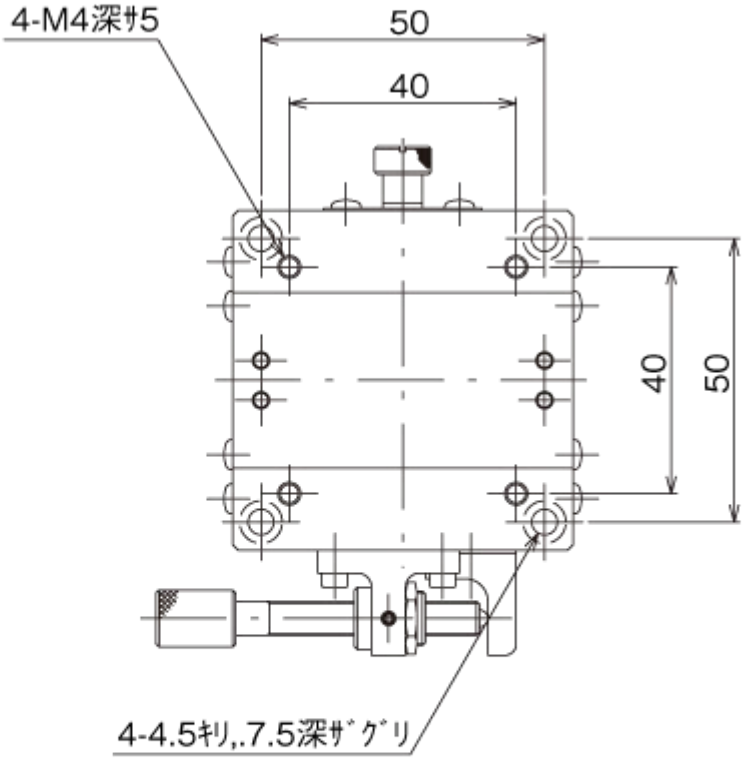
4-M4深ｻ5
50
40
40
50
4-4.5ｷﾘ,.7.5深ｻﾞｸﾞﾘ

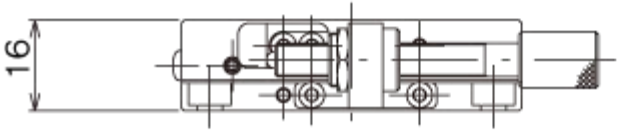
16