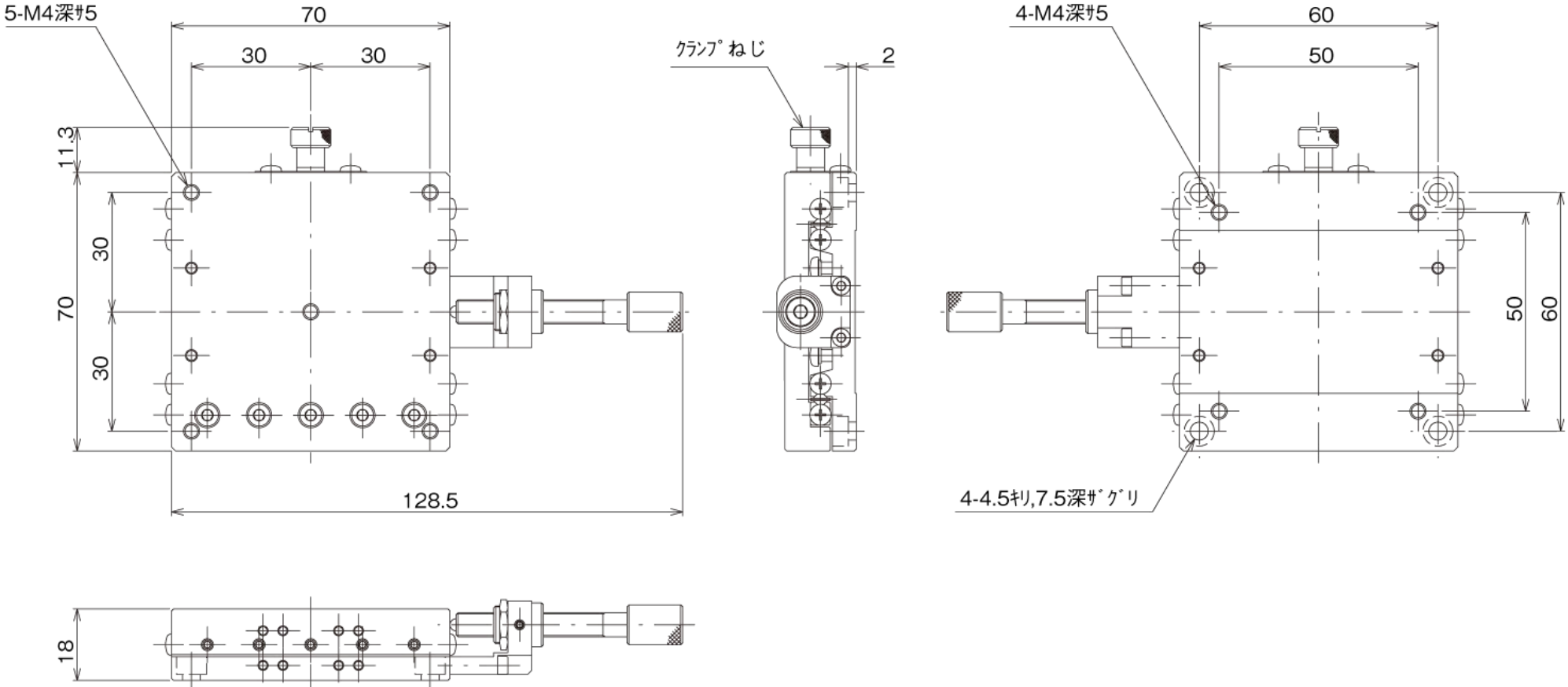
5-M4深ｻ5
70
30
30
11.3
30
70
30
128.5
ｸﾗﾝﾌﾟねじ
2
4-M4深ｻ5
60
50
50
60
4-4.5ｷﾘ,7.5深ｻﾞｸﾞﾘ
18