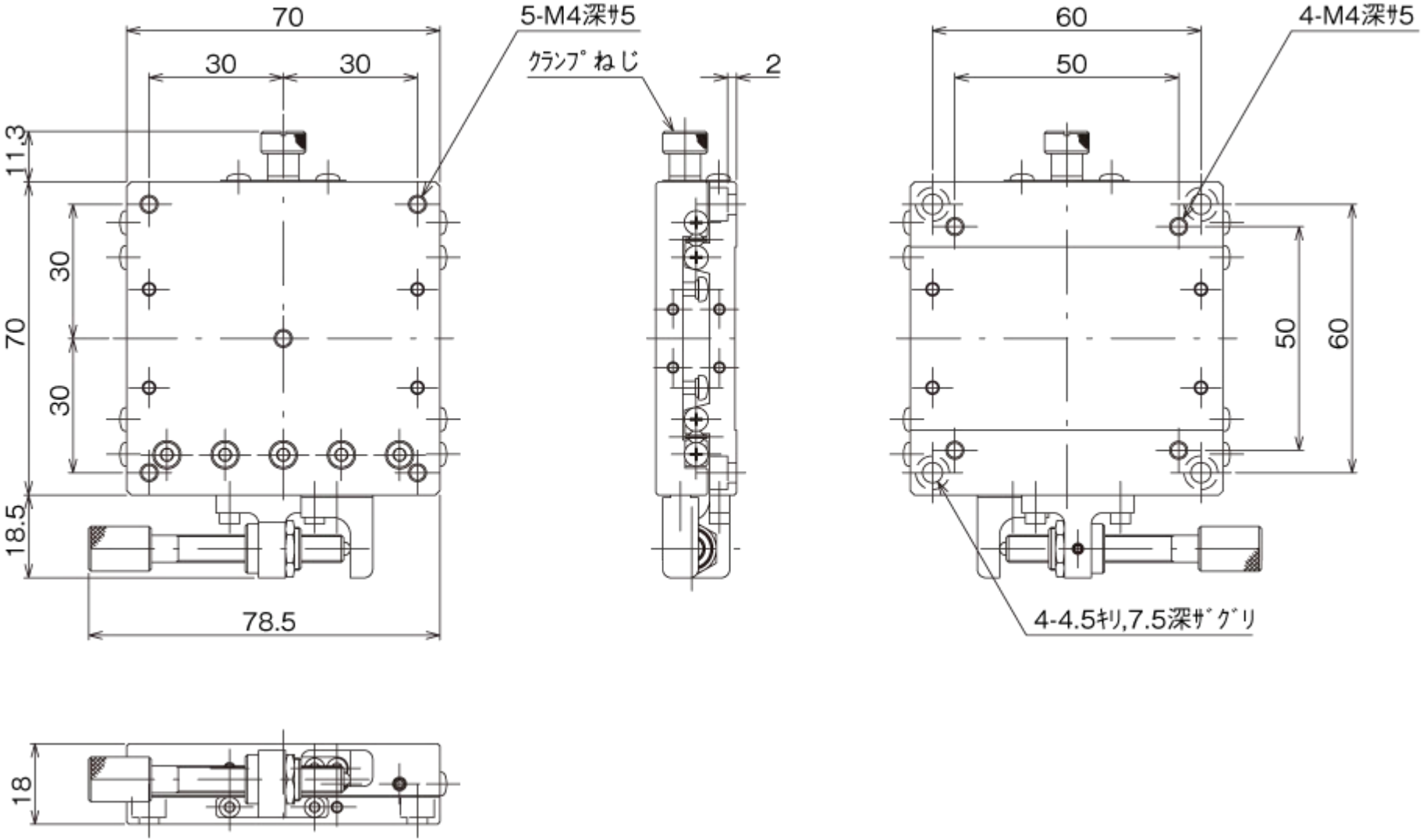
70
30
30
5-M4深ｻ5
ｸﾗﾝﾌﾟねじ
2
60
50
4-M4深ｻ5
11.3
70
30
30
18.5
78.5
50
60
4-4.5ｷﾘ,7.5深ｻﾞｸﾞﾘ
18