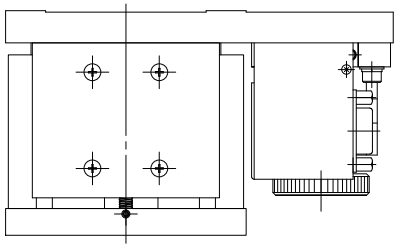

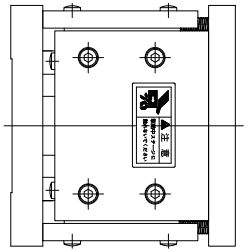

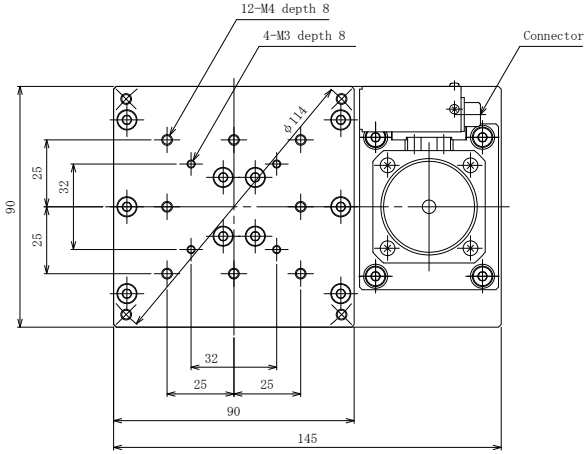


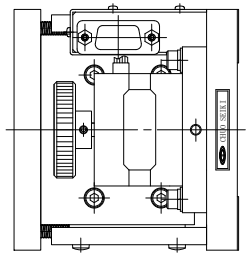

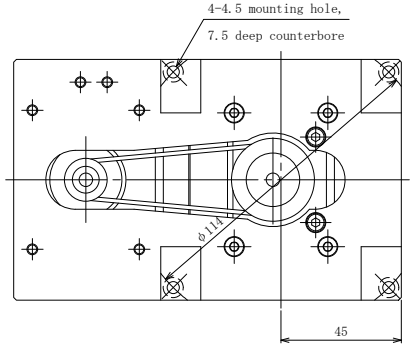


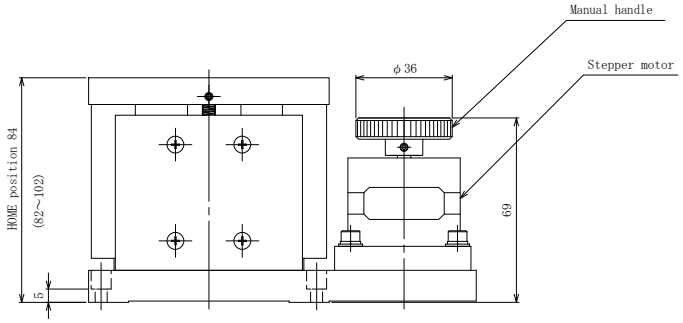


ALV-902-HP

Z lift stage

CHUO PRECISION INDUSTRIAL CO,.LTD.

rev.6

*Mounting screw : Hexagon socket head cap screw M4, 4 screws