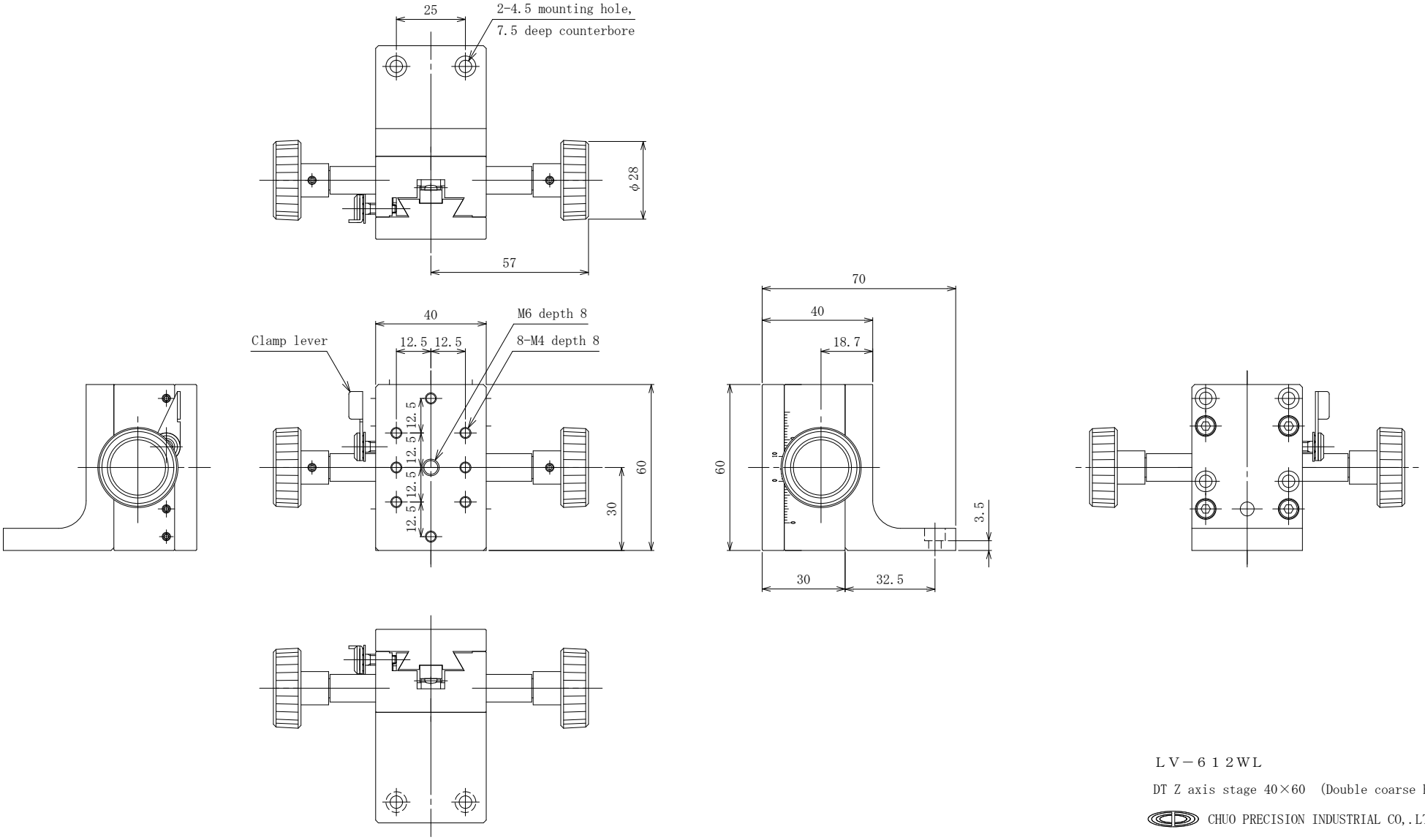

ＬＶ－６１２ＷＬ

DT Z axis stage 40×60 (Double coarse handle)

CHUO PRECISION INDUSTRIAL CO,.LTD.

*Mounting screw : Hexagon socket head cap screw M4, 2 screws