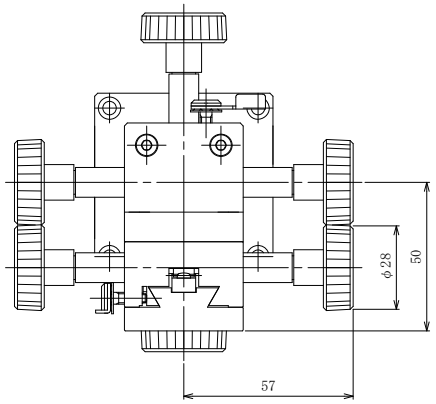

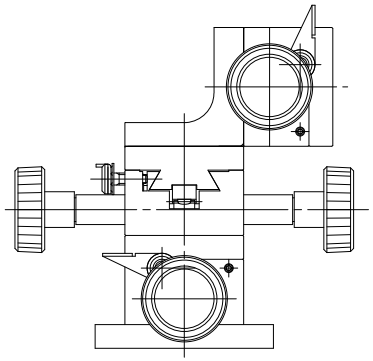

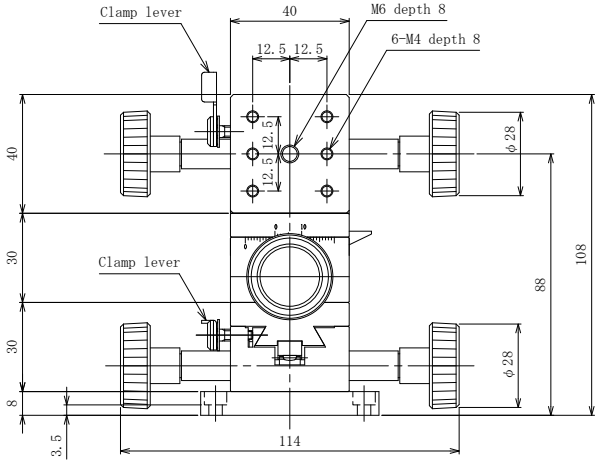

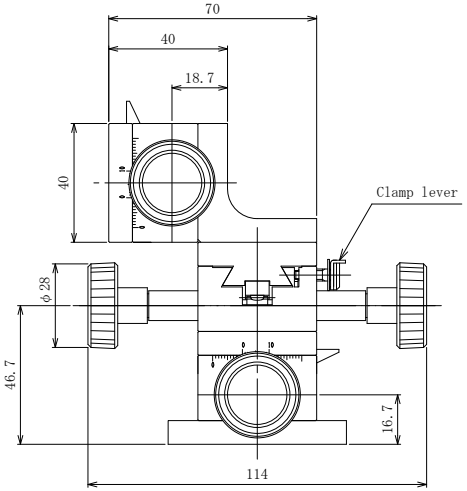

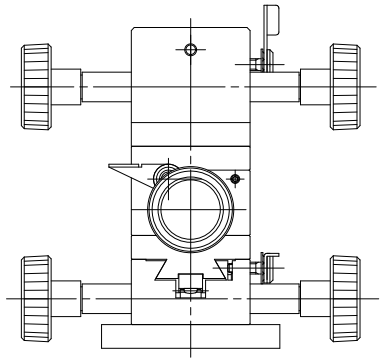

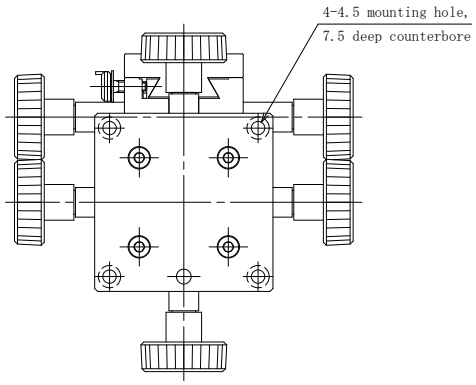

ＬＴ－４１２ＷＬ

DT XYZ axis stage 40×140 (Double coarse handle)

CHUO PRECISION INDUSTRIAL CO,.LTD.

*Mounting screw : Hexagon socket head cap screw M4, 4 screws