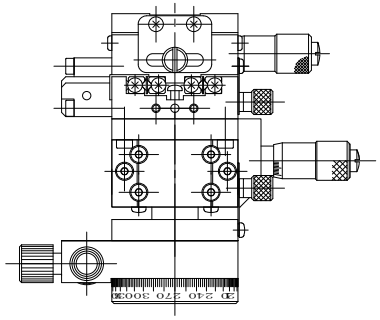

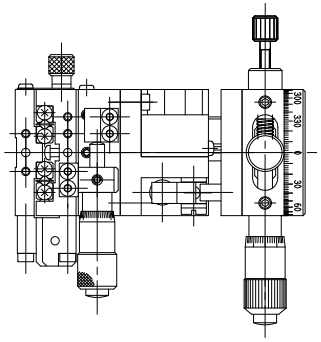

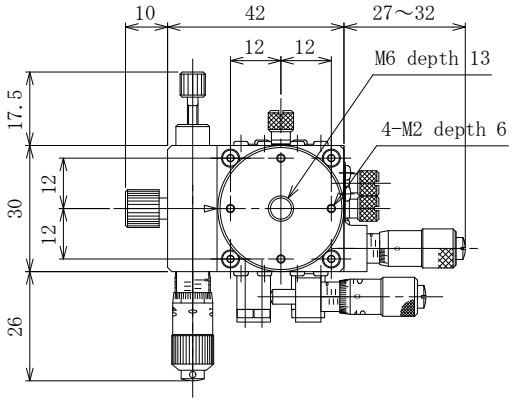

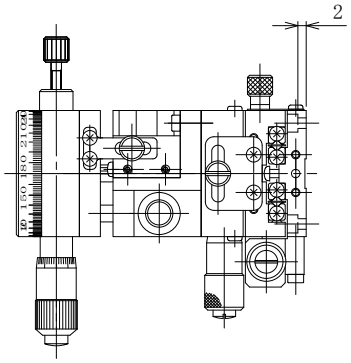

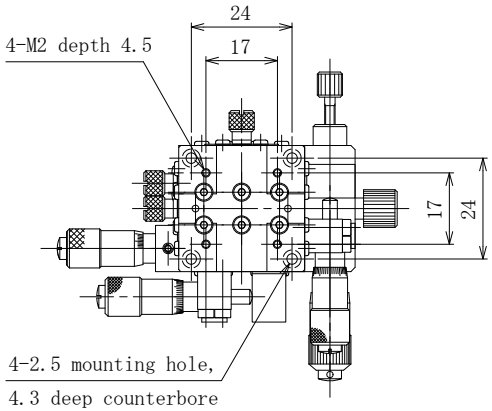

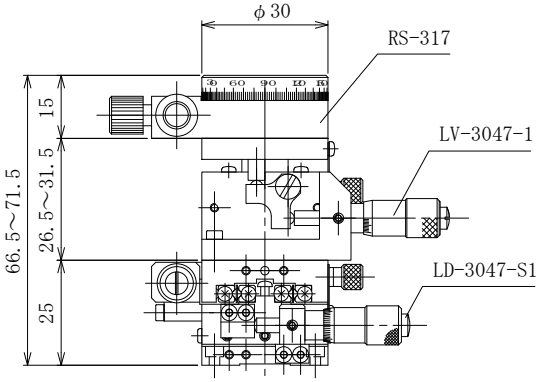

TR－3047－S1

High-Grade Aluminum XYZ-axis Rotary stage 30 x 30

CHUO PRECISION INDUSTRIAL CO,.LTD.

rev.1

Mounting screw : M2 Hexagon socket head cap screws (4 pcs)