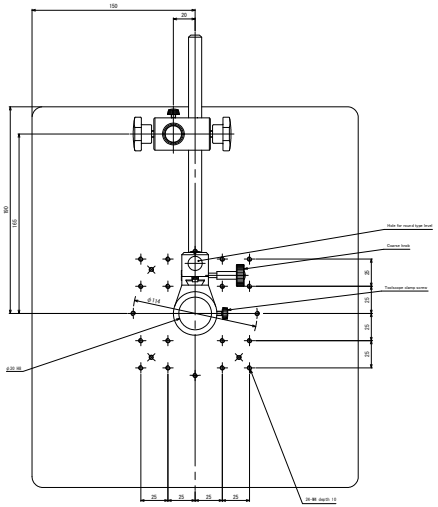

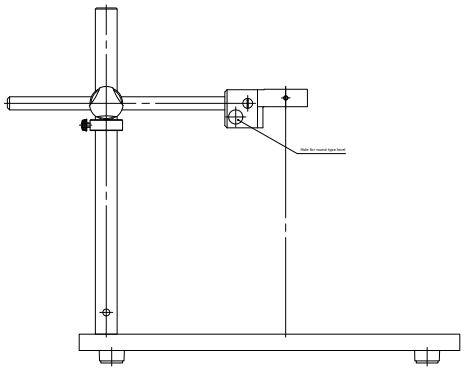

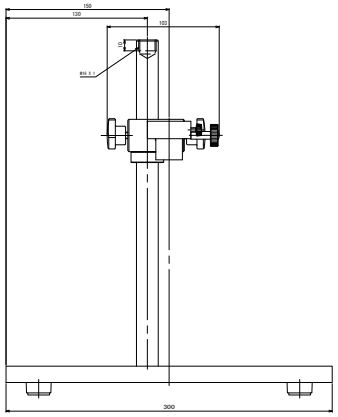

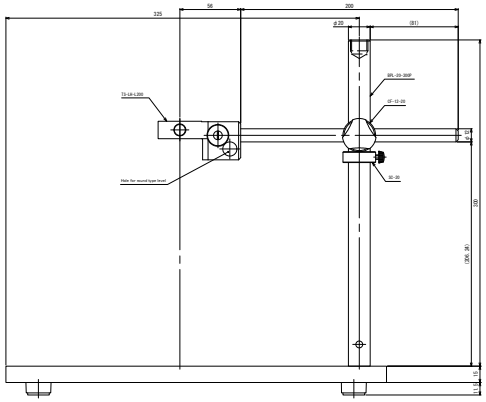

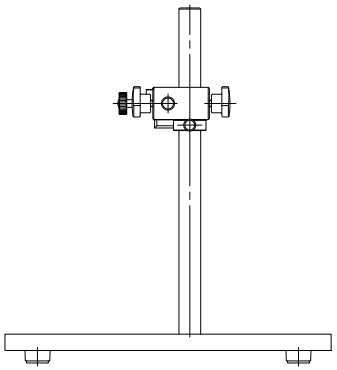

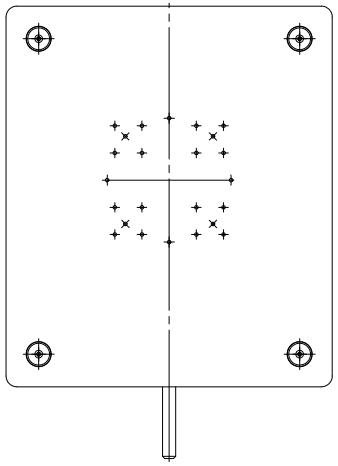

Accessory
Round type level : 1 piece
Double side tape : 1 sheet

TS-LS2
LS2 type stand with level
OHSO PRECISION INDUSTRIAL CO.,LTD.
FWC